CYLINDER

Stationary Cylinder

YS series

Suitable for use on Machining Centre
Suitable for a variety of chuck types

- ●Best suited for versatile work-pieces
- ●Can be easily mounted to milling and drilling machines
- ●Easily mounted to work gripper multiplate
- ●Pneumatic or hydraulic pressure can be supplied

■ Combination example

Combination with PW chuck

Combination with PU chuck

■ Dimensional Drawings

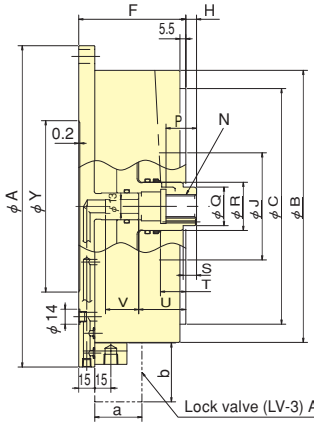

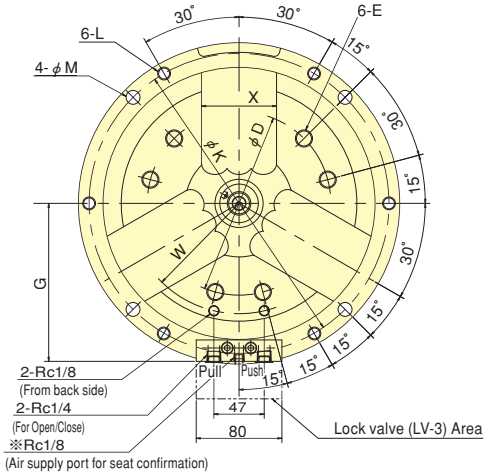

Note 1. For seat confirmation, please remove Orifice Plug marked with ※.

■ Dimensions

※The dimensions of a/b marked are the size of LV-3(Lock-valve).

Model	φAh7	φB	φCh7	φD	E	F	G	H max.	H min.	φJ	φK (±0.2)	L	φM
YS1415K	203	165	140	104.8	M10 depth 17	72	103	8	-7	75	185	M10	11
YS1820K	248	210	170	133.4	M12 depth 24	92	125.5	11	-9	100	230	M10	11
YS2220K	300	254	220	171.4	M16 depth 24	100	147.5	10	-10	100	280	M12	13

Model	N	P	φQ	φR	S	T	U	V	W	X	Y	a	b
YS1415K	M16	14	–	40	–	9.3	23	25	60	48	95	45	55
YS1820K	M18	21.5	30	40	7.3	17.3	35.5	31	80	70	125	45	55
YS2220K	M22	28.5	36	45	12.5	23.7	44	31	95	70	160	45	55

■ Specifications

Model	Piston stroke	Max. allowable pressure		Max. thrust				Net Weight	Matching chuck size
		Pneumatic	Hydraulic	Pneumatic	0.6MPa	Hydraulic	1.5MPa		
YS1415K	15mm	0.7MPa	1.5MPa	Push	8.5kN	Push	20.8kN	15kg	6inch
				Pull	8.1kN	Pull	20.1kN		
YS1820K	20mm	0.7MPa	1.5MPa	Push	15.1kN	Push	37.7kN	22kg	8inch
				Pull	14.6kN	Pull	36.5kN		
YS2220K	20mm	0.7MPa	1.5MPa	Push	21.4kN	Push	53.6kN	39kg	10inch
				Pull	20.8kN	Pull	51.9kN		